Via Marche, 1 - 62010 Morrovalle - Macerata - Italy
www.vittorazi.com - info@vittorazi.com
T.F.+39.0733.866585 Partita I.V.A. 01376410435

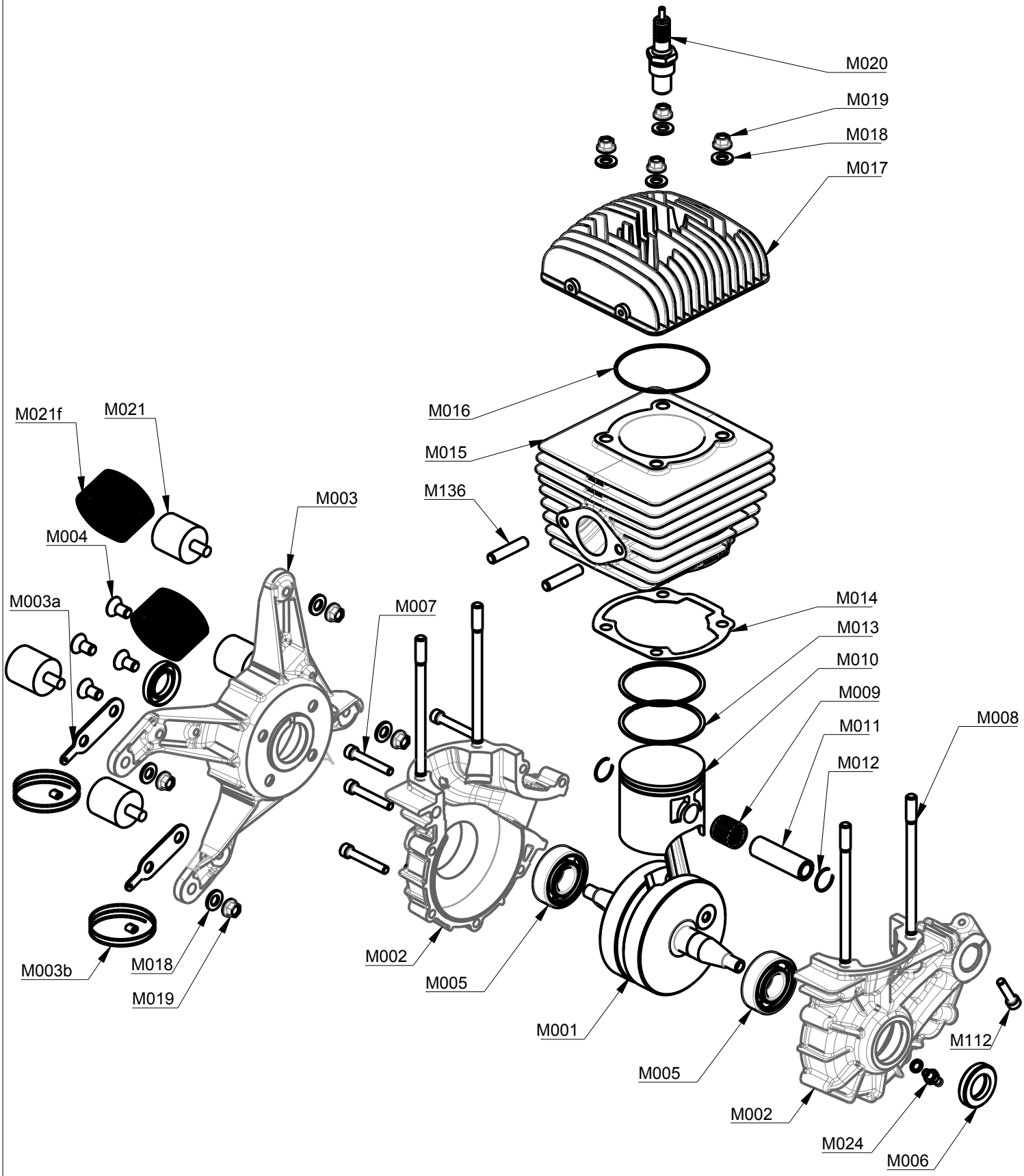

Engine : Moster185 classic (first version)		I.P.C. Number 0020	
Version : manual starter	Group : Thermal unit	Update : January 2019	Page : 1/4

vittorazi MOTORS
Via Marche, 1 - 62010 Morrovalle - Macerata - Italy
www.vittorazi.com - info@vittorazi.com
T.F.+39.0733.866585 Partita I.V.A. 01376410435

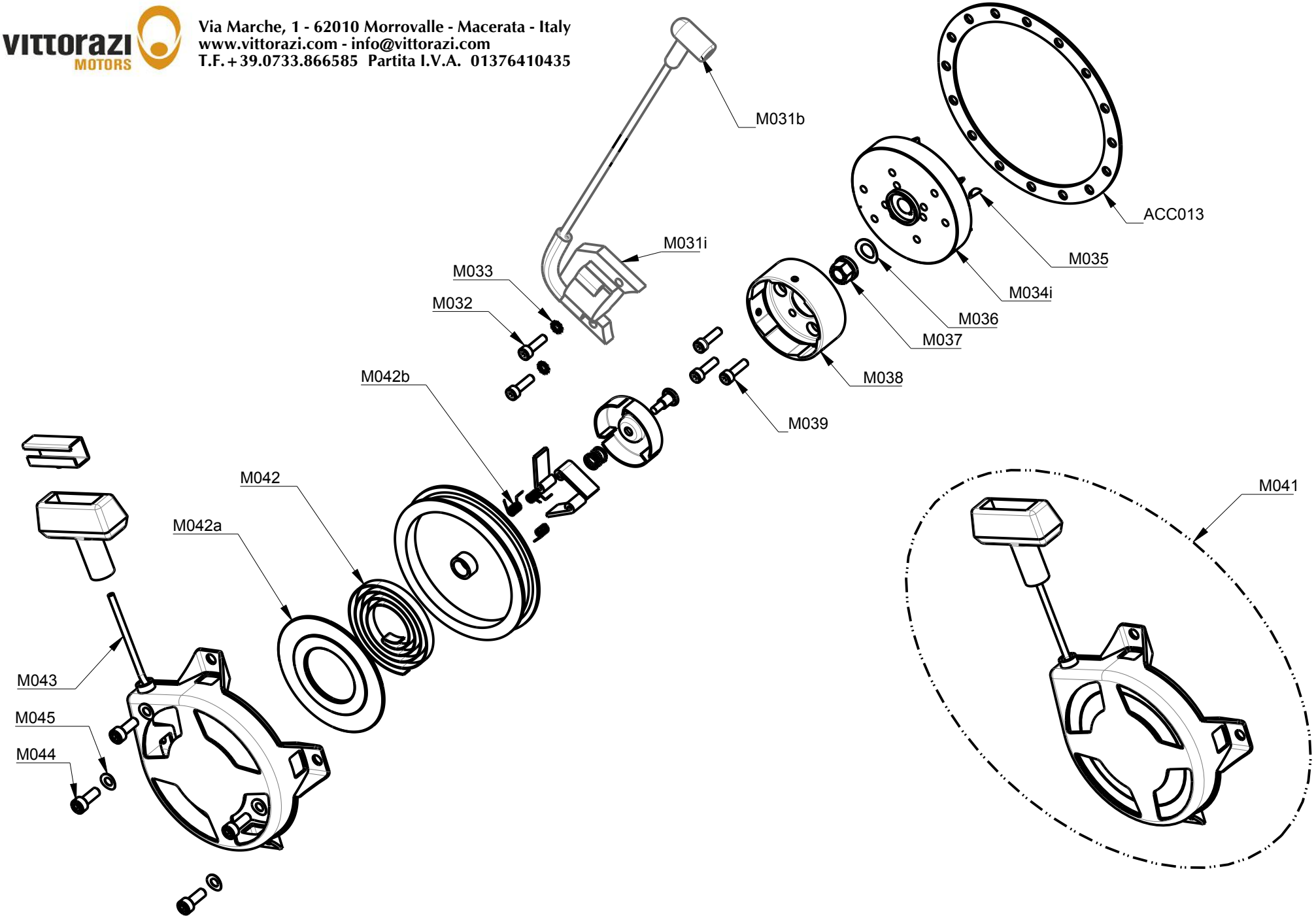

Engine : Moster185 classic (first version)		I.P.C. Number 0020	
Version : manual starter	Group : Pull starter	Update : January 2019	Page : 2/4

vittorazi MOTORS
Via Marche, 1 - 62010 Morrovalle - Macerata - Italy
www.vittorazi.com - info@vittorazi.com
T.F.+39.0733.866585 Partita I.V.A. 01376410435

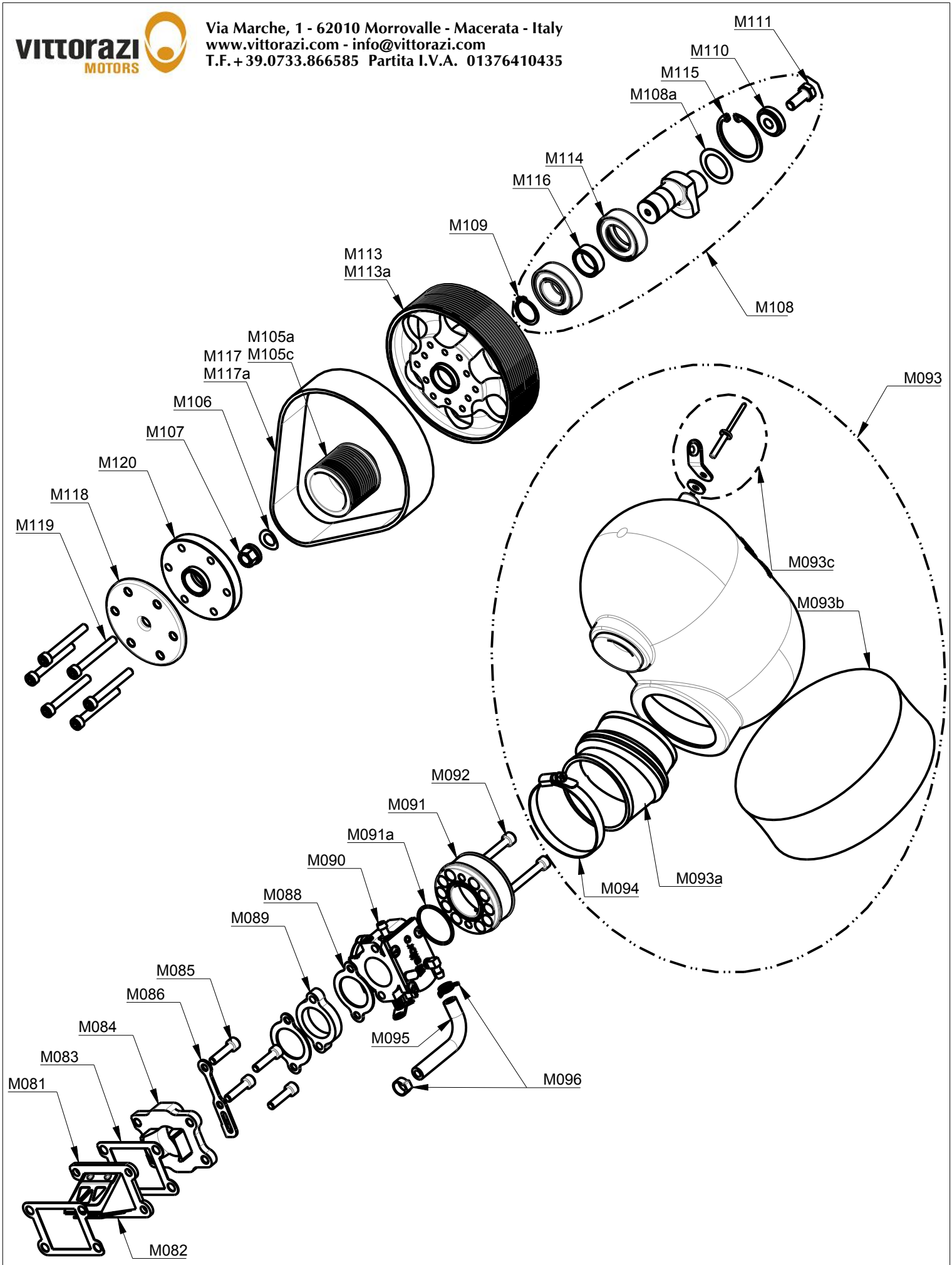

Engine : Moster185 classic (first version)		I.P.C. Number 0020	
Version : manual starter	Group : Reduction drive/Aspiration	Update : January 2019	Page : 3/4

Via Marche, 1 - 62010 Morrovalle - Macerata - Italy
www.vittorazi.com - info@vittorazi.com
T.F.+39.0733.866585 Partita I.V.A. 01376410435

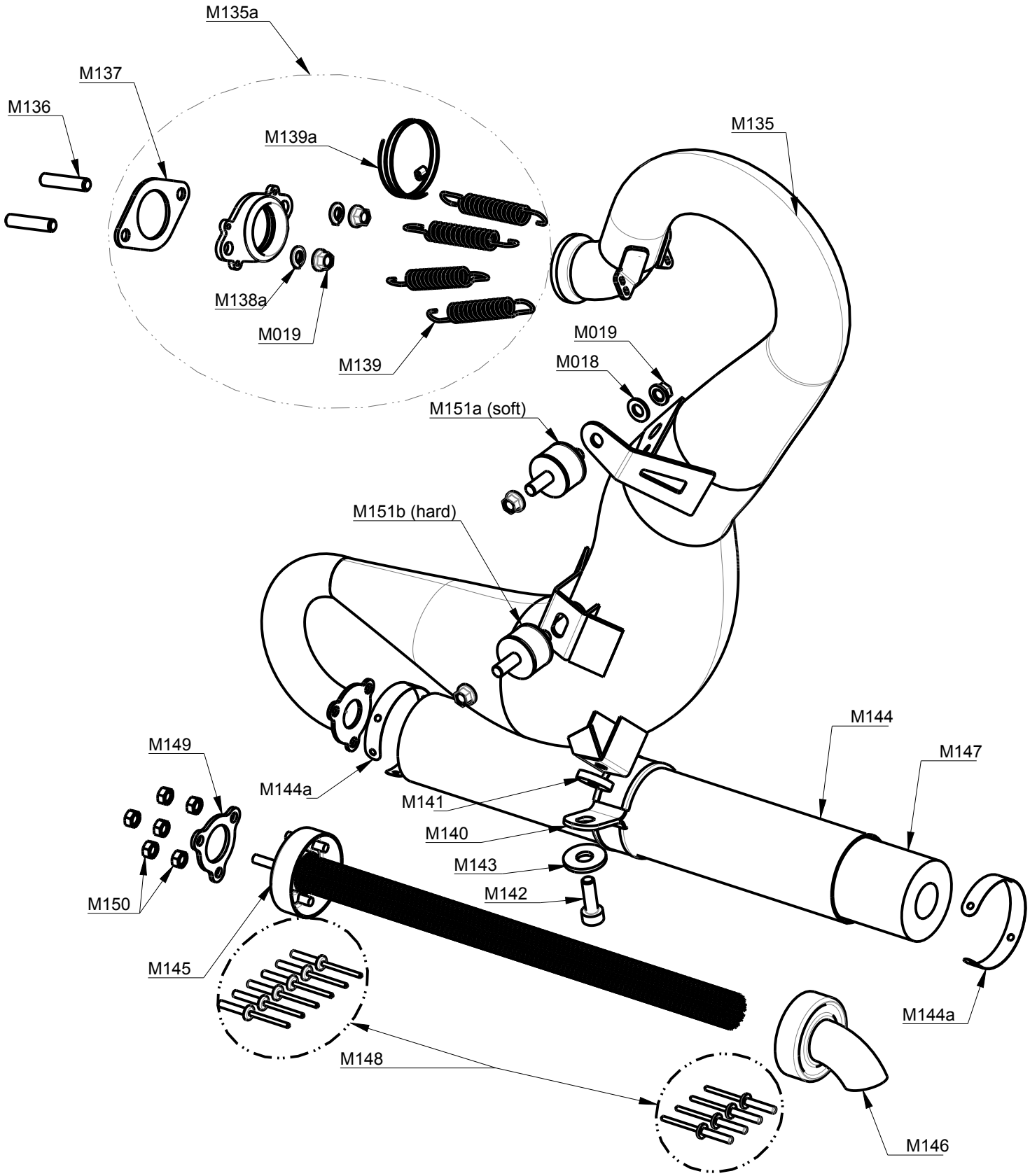

Engine : Moster185 classic (first version)		I.P.C. Number 0020	
Version : manual starter	Group : Exhaust	Update : January 2019	Page : 4/4